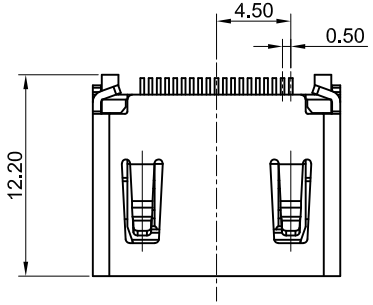

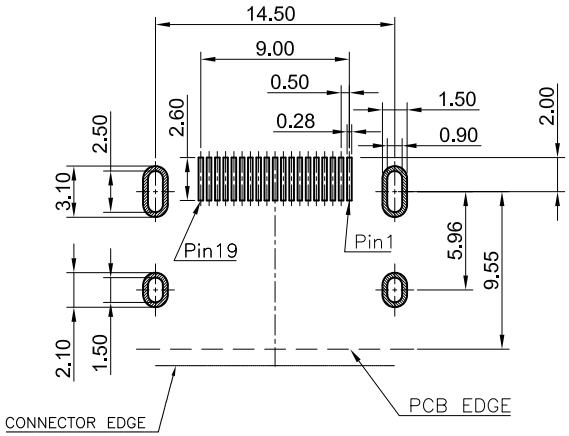

RECOMMENDED PCB LAYOUT (TOP VIEW)

TOLERANCE: ±0.05mm

SPECIFICATIONS:

1. ELECTRICAL CHARACTERISTICS
   - 1−1. CURRENT RATING: 0.5 AMP
   - 1−2. VOLTAGE RATING: 40 V
   - 1−3. CONTACT RESISTANCE: 30MILLIOHMS MAX
   - 1−4. INSULATION RESISTTANCE:100M MIN.@500V DC
   - 1−5. DIELECTRIC WITHSTANDING VOLTAGE: 500V AC FOR 1 MINUTE
2. MECHANICAL CHARACTERISTICS:
   - 2−1. INSERTION FORCE : 4.5KGF MAX.
   - 2−2. WITHDRAWING FORCE : 1KGF ~ 4KGF.
3. LIFE TEST: 10000 CYCLES
4. OPERATING TEMPERATURE: −25°C TO +85°C
5. PART NO. DESCRIPTION:

HDMI SMT Molding式成品料号

KHD □□−□□□□□□−□□□

SERIES NO:
18 : SMT Molding式

外壳材质：
1.铜材
2.铁材（光面）
3.铁材（麻面）
4.S50C
5.磷铜

外壳：电镀
1. NICKEL PLATED(鎳殼全部鍍可焊錫最小80u".
2. GOLD FLASH PLATED
3. GOLD PLATED 0.6U
4. GOLD PLATED 足1U
5. GOLD PLATED 足3U

端子:电镀规格
1. 1u"Au 雾锡

流水码:
0.无螺孔: 0 XX
1.螺孔高8.8mm 宽8.0mm M2*0.4 (2.75mm）:1XX
2.螺孔高10.38mm 宽8.0mm M3*0.5 (4.33mm）:2XX
3.螺孔高11.3mm 宽8.0mm M3*0.5 (5.25mm）:3XX
4.螺孔高11.3mm 宽8.0mm M3*0.5 (5.25mm）:4XX 后移0.9mm
5.螺孔高13.38mm 宽8.0mm M3*0.5(7.33mm）:5XX

⑦ 包装方式
1:真空盘(100装)
2:卷盘(350)

⑥ MARK标记（或印字）
0:NO MARK
1:DATE CODE
2:TYCO+DATE CODE
3:FCI+DATE CODE

塑胶类 型:
A: 无柱
D: 有柱D款

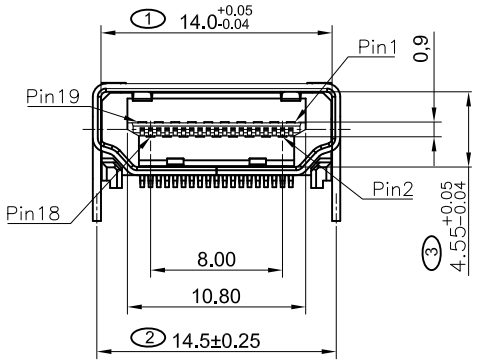

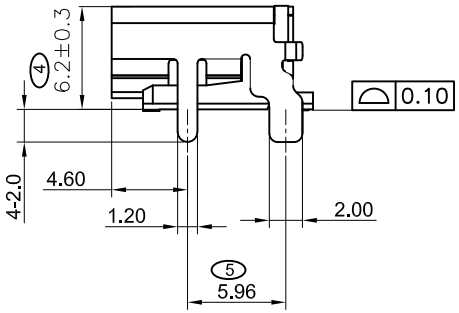

※ SIGN "Ⓧ" IS IMPORTANCE DIMENSION

NO	PART NAME	QTY	MATERIAL PLATING & COLOR
C	SHELL	1	C2680R−H Ni 50u" T=0.5mm PLATING ALL OVER
B	TERMINAL	19	C2680R−H SEE PART NO.
A	HOUSING	1	LCP E130i UL94V−0 BLACK

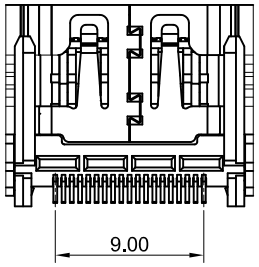

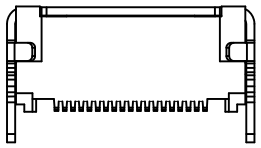

KEm 奇速科技有限公司
Qi -Speed Technology CO., LTD.

產品名稱: PRODUCT NAME
HDMI A TYPE SMT

版本	修改事項	修改日期

單位：mm
比例：
公差： .X ±0.38
.XX ±0.25
.XXX ±0.13
日期： 2016/6/6

繪圖 DRAWING	設計 DESIGNED	審核 CHECKED BY	核准 APPROVAL BY
JOHNY	JOHNY	LUKE	JAMES

料號:KHD18-111A0X-001
PART NUMBER

圖號:KHD18-111A0X-001-1
DRAWING NO

版本: REV. 0