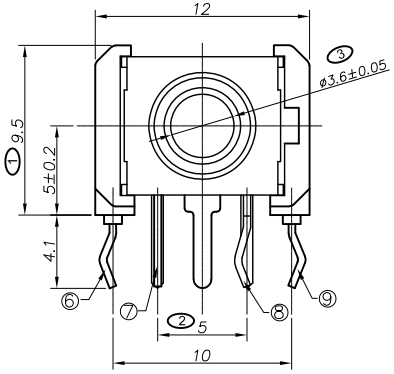

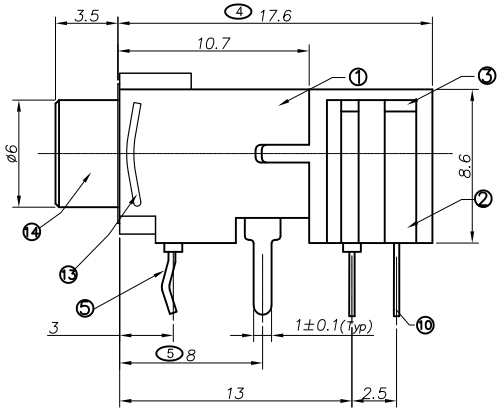

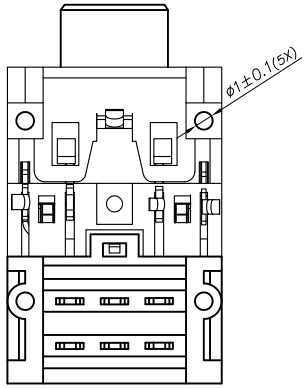

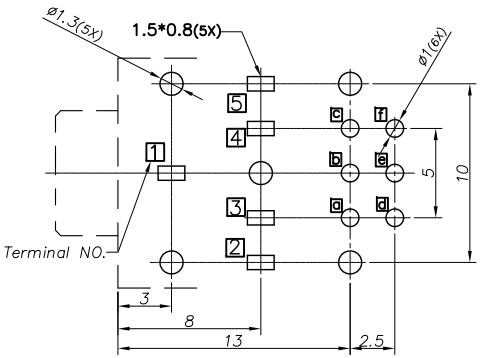

RECOMMENDED P.C.B. LAYOUT
UNSPECIFIED TOLERANCE:±0.05
(BOTTOM VIEW)

P/N	KPJD-3006B-A-3.5	KPJD-3006B-B-3.5
Schematic	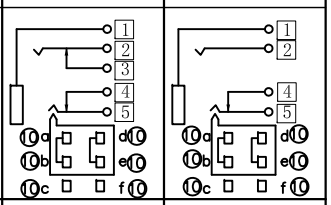	
P/N	KPJD-3006B-C-3.5	KPJD-3006B-D-3.5
Schematic	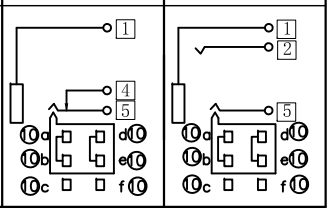	

□: TERMINAL NO. ○: ITEM NO.

Specification:
1. Rating : DC 30V 0.5A.
2. (1) Contact resistance (Front body:1#-5#): ≤50mΩ.
   After test:≤100mΩ
   (2) Contact resistance (After body:a#-f#): ≤30mΩ.
   After test:≤50mΩ
3. Insulation resistance: ≥100MΩ (500VDC).
   After test:≥50MΩ
4. Withstanding voltage: 500VAC.
5. Insertion and extraction force: 3N～30N.
6. life test: 5000cycles min.
7. Operation temperature range:-20℃～70℃.
8. Preservative temperature range:-40℃～85℃.

※ SIGN "(X)" IS IMPORTANCE DIMENSION

NO.	DESCRIPTION	QTY	MATERIAL	REMARK
⑭	Bushing	1	Copper alloy	Nickel plating
⑬	Spring(卡簧)	1	Spring wire	Nickel plating
⑫	Spring	1	Spring wire	
⑪	Clip	2	Alloy t0.05	
⑩	Switch terminal	6	Brass t0.35	Silver(Ag) plating
⑨	Tip spring 5	1	Stainless steel t0.25	Silver(Ag) plating
⑧	Shunt terminal 4	1	Brass t0.4	Tin plating
⑦	Shunt terminal 3	1	Brass t0.4	Tin plating
⑥	Ring spring 2	1	Phosphor bronze t0.25	Tin plating
⑤	Earth terminal 1	1	Brass t0.5	Tin plating
④	Slide housing	1	PA66	Black
③	Switch cover	1	PA66	Black
②	Switch Housing	1	PBT	Black
①	Housing	1	PA66	Black

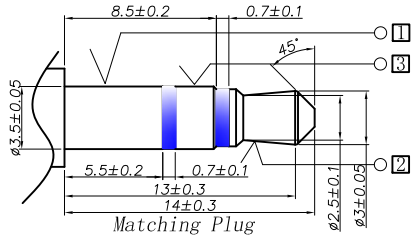

Matching Plug

KEm 奇速科技有限公司
Qi-Speed Technology CO., LTD.

產品名稱: PRODUCT NAME: ø3.5 PHONE JACK

版本	修改事項	修改日期

單位: mm
比例:
公差: X. ±0.38
.X ±0.30
.XX ±0.25
日期: 2011/5/20

繪圖 DRAWING	設計 DESIGNED	審核 CHECKED BY	核准 APPROVAL BY
JOHNY	JOHNY	LUKE	JAMES

料號: KPJD-3006B-X-3.5 PART NUMBER
圖號: KPJD-3006B-X-3.5-1 DRAWING NO
版本: REV. 0