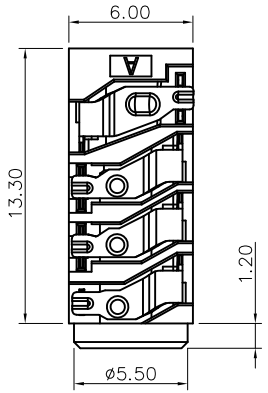

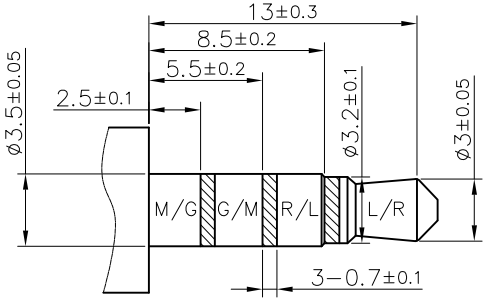

RECOMMENDED PLUG
ø3.5 4−POLE STANDARD PLUG

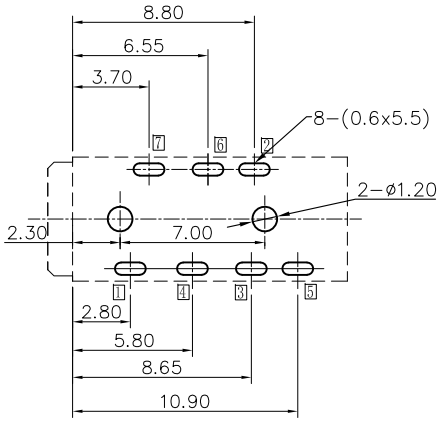

PCB HOLES(TOP VIEW) t=1.6mm
NOTE: GENERAL TOLERANCE: ±0.05mm

Specification:
1. Rating : DC 30V 0.5A.
2. Contact resistance: ≤50mΩ.
   After life test: ≤100mΩ.
3. Insulation resistance: ≥100MΩ (500VDC).
   After life test: ≥50MΩ.
4. Withstand voltage: 500VAC.
5. Insertion and extraction force:
   3N～30N(Initial).
   3N～30N(After Life Test).
6. life test: 5000cycles min.
7. Operation temperature range: -20℃～70℃.
8. Preservative temperature range: -40℃～85℃.

※ SIGN "Ⓧ" IS IMPORTANCE DIMENSION

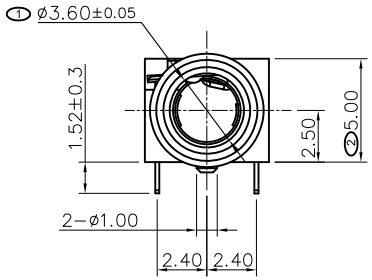

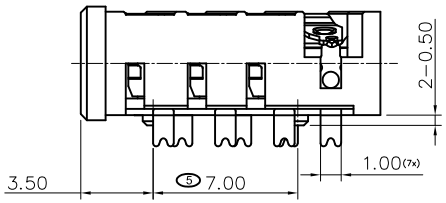

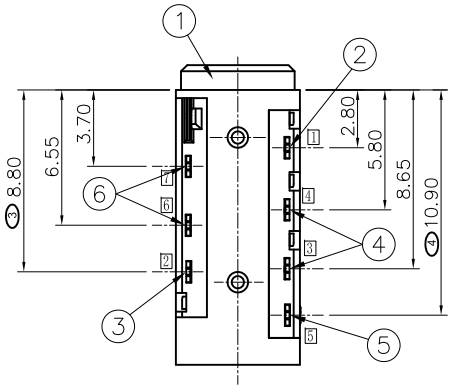

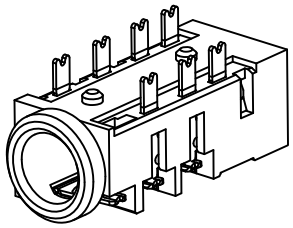

Schematic

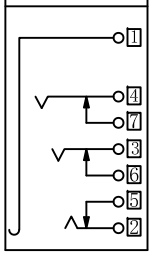

NO.	DESCRIPTION	QTY	MATERIAL	REMARK
⑥	SHUNT TERMINAL 6 7	2	C5191R−H,T=0.20	Silver plating
⑤	SHUNT TERMINAL 5	1	C5191R−H,T=0.20	
④	RING SPRING 3 4	2	SUS301R−1/2H,T=0.20	
③	TIP SPRING 2	1	SUS301R−1/2H,T=0.20	
②	Earth spring 1	1	SUS301R−1/2H,T=0.20	
①	Housing	1	HIGH TEMP. THERMOPLASTIC	BLACK

KEm 奇速科技有限公司
Qi-Speed Technology CO., LTD.

產品名稱: PRODUCT NAME: Ø3.5 PHONE JACK

版本	修改事項	修改日期

單位: mm
比例:
公差: .X ±0.50
.XX ±0.30
.XXX ±0.15
日期: 2021/11/20

繪圖 DRAWING	設計 DESIGNED	審核 CHECKED BY	核准 APPROVAL BY
JOHNY	JOHNY	LUKE	JAMES

料號: KPJD-30930-3.5 PART NUMBER
圖號: KPJD-30930-3.5-1 DRAWING NO
版本: REV. 0