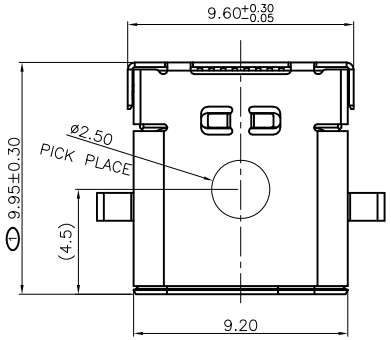

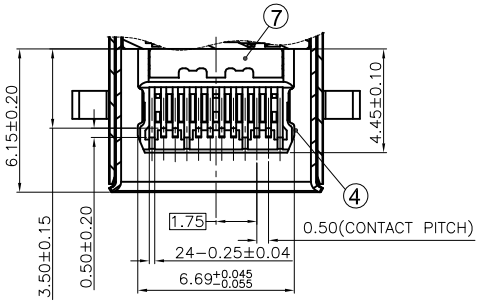

SECTION B−B

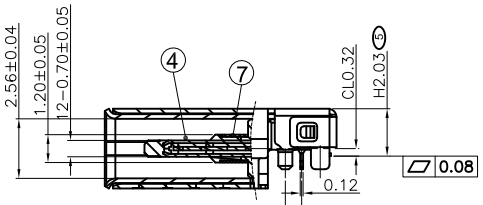

SECTION A−A

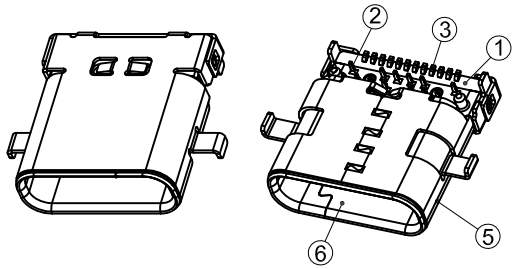

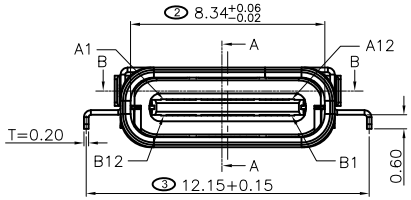

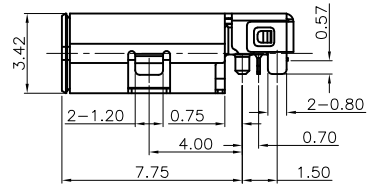

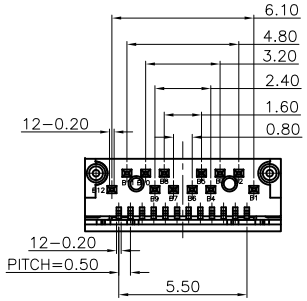

Detail A

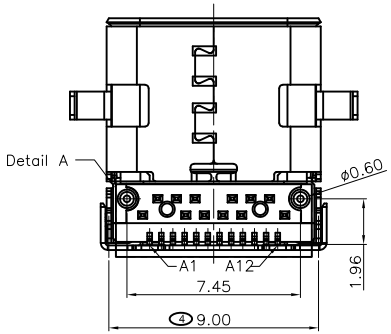

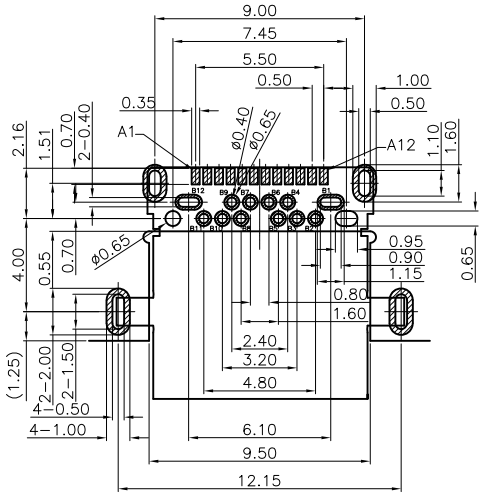

RECOMMENDED P.C.B. LAYOUT
TOLERANCE UNSPECIFIED ±0.05mm
(TOP VIEW)

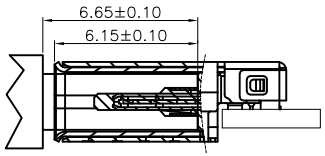

MATED CONDITION(REF.)

USB TYPE−C PIN ASSIGNMENTS

PIN NUMBER	SIGNAL NAME	PIN NUMBER	SIGNAL NAME
A1	GND	B12	GND
A2	SSTXp1	B11	SSRXp1
A3	SSTXn1	B10	SSRXn1
A4	VBUS	B9	VBUS
A5	CC1	B8	SBU2
A6	Dp1	B7	Dn2
A7	Dn1	B6	Dp2
A8	SBU1	B5	CC2
A9	VBUS	B4	VBUS
A10	SSRXn2	B3	SSTXn2
A11	SSRXp2	B2	SSTXp2
A12	GND	B1	GND

NOTE:

1. Electrical Characteristics:
   1−1: Current Rating: 5A For Pin(A4,A9,B4,B9)
   1.25A For Pin(B5)
   0.25A For Others Pin
   1−2: VOLTAGE RATING:20V
   1−3: Insulation Resistance: 100MΩ Min.
   1−4: Contact Resistance:
   VBUS & GND PINS AND OTHER PINS: 40mΩ/PIN MAX.
   SHIELD:50mΩ/MAX.
   SHIELD:LLCR MAX. CHANGE OF ALL PINS: 10mΩ.
   1−5: Dielectric Withstanding Voltage: 100V/AC 1Minute
2. Mechanical Characteristics:
   Insertion Force: 5~20N
   Extraction Force: Initial: 8~20N
   After durability: 6~20N
   Durability :10000 Cycles
3. Operating Temperature: −25°C TO +85°C

※ SIGN "Ⓧ" IS IMPORTANCE DIMENSION

TYPE:

NO.	DESCRIPTION	MATERIAL	REMARKS	QTY
7	EMC PLATE	SUS301 T=0.10mm	CLEAR ONLY	2PCS
6	OUTER SHELL	SUS304 T=0.20mm	NICKEL 30u" MIN PLATING	2PCS
5	INNER SHELL	SUS304 T=0.20mm	NICKEL 30u" MIN PLATING	1PCS
4	SHIELDING PLATE	SUS301 T=0.15mm	CLEAR ONLY	1PCS
3	SMT CONTACT	BRASS T=0.12mm	Ni 50u" MIN. UNDER PLATED OVER ALL. Au PLATED ON THE FUNCTIONAL AREA OF CONTACT. PLATING Tin OF THE SOLDER AREA	1SET
2	DIP CONTACT	BRASS T=0.12mm	Ni 50u" MIN. UNDER PLATED OVER ALL. Au PLATED ON THE FUNCTIONAL AREA OF CONTACT. PLATING Tin OF THE SOLDER AREA	1SET
1	HOUSING	LCP UL94V−0	BLACK	1PCS

KEm 奇速科技有限公司
Qi -Speed Technology CO., LTD.

產品名稱:
PRODUCT NAME
USB 3.1 C TYPE
沉板 DIP+SMT CL0.32 L=10.0

版本	修改事項	修改日期

單位 : mm
比例 :
公差 : .X ±0.38
.XX ±0.25
.XXX ±0.13
日期 : 2021/5/23

繪圖 DRAWING	設計 DESIGNED	審核 CHECKED BY	核准 APPROVAL BY
JOHNY	JOHNY	LUKE	JAMES

料號:KUSBC021-F001
PART NUMBER

圖號:KUSBC021-F001-1
DRAWING NO

版本: REV. 0